Model No. DUB361 CORDLESS BLOWER

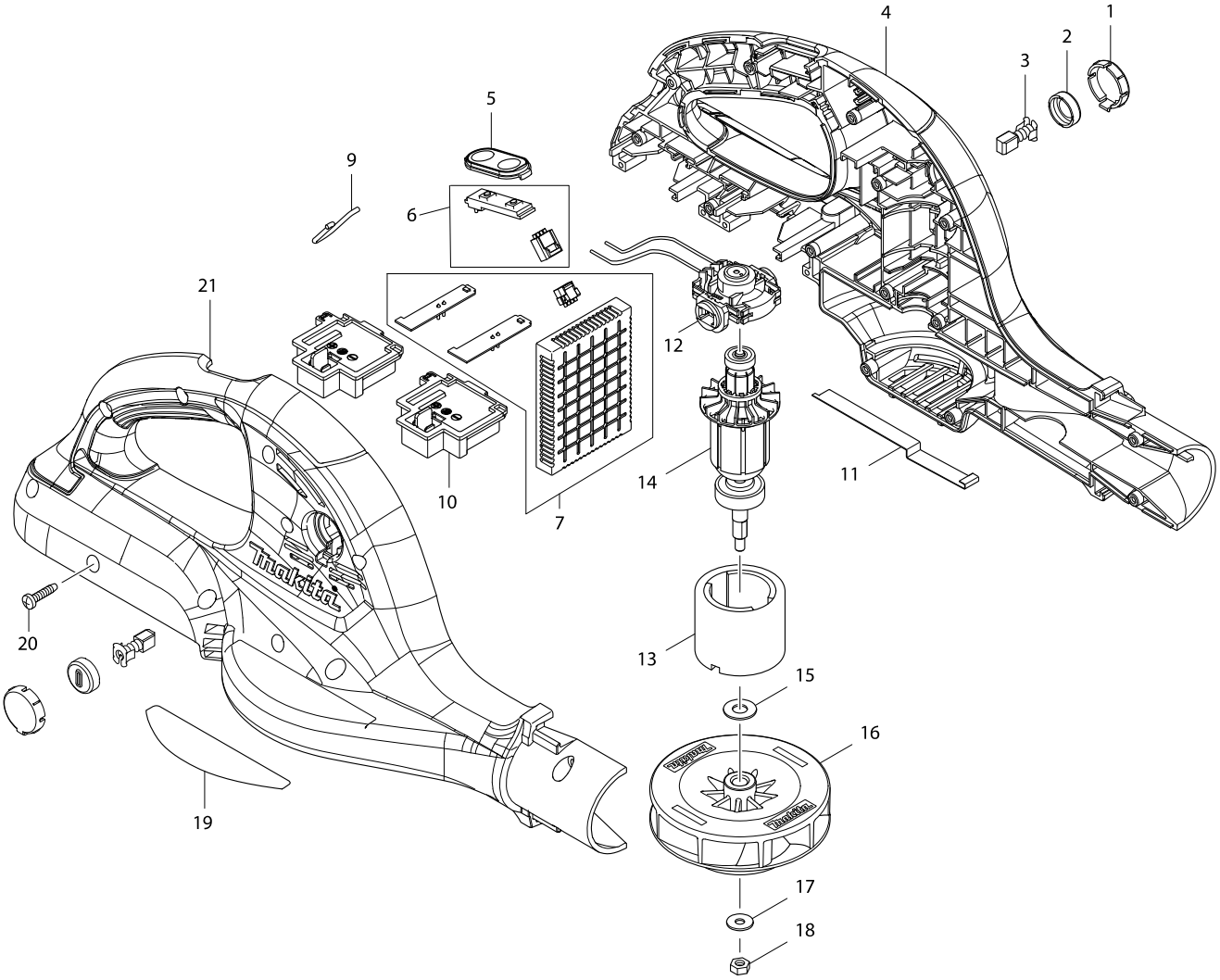

Model No. DUB361 CORDLESS BLOWER

Item	Parts No.	Description	I/C	Qty	N/O	Opt. 1	Opt. 2	Note
001	452145-4	HOLDER CAP COVER		2				
002	643929-3	BRUSH HOLDER CAP		2				
003	191971-3	CARBON BRUSH CB-430		1				
004	187850-1	HOUSING SET		1				
C10	263005-3	RUBBER PIN 6		4				
C20	891050-4	CAUTION LABEL		1				
D10		INC. 21						
005	140463-9	SWITCH PLATE COMPLETE		1				
006	620282-4	SWITCH COMPLETE		1				
007	620276-9	CONTROLLER		1				
009	325973-9	HANGER		1				
010	644808-8	TERMINAL		2				
011	346328-5	EARTH PLATE		1				
012	632B93-7	ENDBELL COMPLTE		1				
013	638420-4	YOKE UNIT		1				
014	619260-9	ARMATURE		1				
015	253865-1	FLAT WASHER 8		1				
016	240124-2	FAN 95		1				
017	253194-2	FLAT WASHER 5		1				
018	252177-9	HEX.NUT M5-8		1				
019	815N43-1	DUB361 NAME PLATE		1				
020	265995-6	TAPPING SCREW 4X18		14				
021	187850-1	HOUSING SET		1				
C10	263005-3	RUBBER PIN 6		4				
C20	891050-4	CAUTION LABEL		1				
D10		INC. 4						
A01	166095-4	SHOULDER BELT		1				
A02	452123-4	LONG NOZZLE		1				
E01	688165-4	LINE FILTER		1				
E02	807811-2	SOUND 96DB LABEL		1				

Please order the parts with a part number.

Print Date 06/05/2015